Tubefittings.eu

Berzyna 83B
64-200 Wolsztyn
tel: +48 68 888 02 33

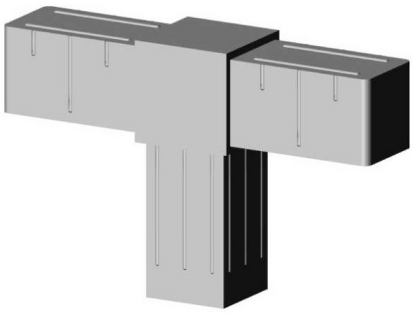

T-Connector (2 axes, 3 slots) – for profile 20x20x1.5 mm - grey

link to the product:
https://tubefittings.eu/en/plastic-connectors-for-square-profiles/4901-t-connector-2axes-3slots-20x20x15-grey-5907291158739.html

Price: **€1.19** gross

Manufacturer: Klemp

Referention number: 2D3-V20-X1-5-S

Information:

Aluminum profile connector 20x20x1.5 mm. Made from PA6 polyamide reinforced with fiberglass, it is resistant to mechanical damage. Equipped with 2 axes and 3 sockets, it allows for stable joining of profiles. The wall thickness of 2 mm ensures structural strength while maintaining a lightweight design (0.024 kg). Compatible with standard aluminum profiles. Color: gray.

Product dimensions - B-20 mm; L-20 mm; L1-31,5 mm; B1-16,8 mm; H-16,8 mm

The size of the discount

Quantity	Discount	Spare
10	2%	above €0.24
20	5%	above €1.19
100	15%	above €17.85
500	20%	above €119.00
1000	30%	above €357.00

Product features

Material	Polyamide PA6 - glass fiber reinforced
Colour	Grey Matt
Type	T-piece
Mounting method	By plug, using a rubber hammer
Matching profile	20x20x1,5 mm
Number of axes	2
Number of slots	3
Core	Standard plastic connectors