Tubefittings.eu

Berzyna 83B
64-200 Wolsztyn
tel: +48 68 888 02 33

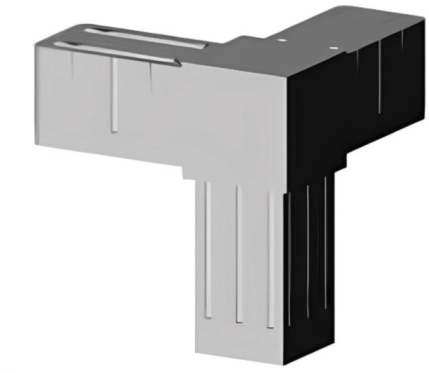

Corner T-Connector (3 axes, 3 slots) – for profile 20x20x1.5 mm - grey

link to the product:
https://tubefittings.eu/en/plastic-connectors-for-square-profiles/4903-corner-t-connector-3axes-3slots-20x20x15-grey-5907291158753.html

Price: **€1.78** gross

Manufacturer: Klemp

Referention number: 3D3-V20-X1-5-S

Information:

Corner connector - 3 axes - 3 sockets - 3D3 V20 X1.5 S for joining profiles of 20x20x1.5 mm at a right angle. Made from PA6 polyamide reinforced with fiberglass, it offers high durability and wear resistance. The three axes and three sockets enable stable connections in both industrial and hobbyist constructions. Wall thickness is 2 mm, and the use of standard plastic connectors ensures a secure fit. Color: grey. Weight: 0.024 kg.

Product dimensions - B-20 mm; L-20 mm; L1-31,5 mm; B1-16,8 mm; H-16,8 mm

The size of the discount

Quantity	Discount	Spare
10	2%	above €0.36
20	5%	above €1.78
100	15%	above €26.70
500	20%	above €178.00
1000	30%	above €534.00

Product features

Material	Polyamide PA6 - glass fiber reinforced
Colour	Grey Matt
Type	Corner piece
Mounting method	By plug, using a rubber hammer
Matching profile	20x20x1,5 mm
Number of axes	3
Number of slots	3
Core	Standard plastic connectors