Tubefittings.eu

Berzyna 83B
64-200 Wolsztyn
tel: +48 68 888 02 33

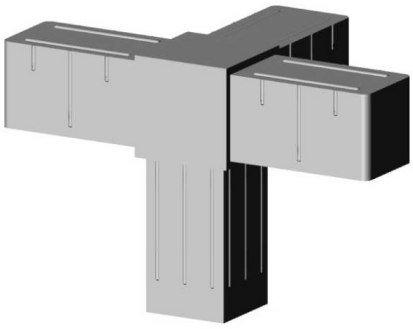

Corner Elbow (3 axes, 4 slots) – for profile 20x20x1.5 mm - grey

link to the product:
https://tubefittings.eu/en/plastic-connectors-for-square-profiles/4904-corner-elbow-3axes-4slots-20x20x15-grey-5907291158760.html

Price: **€1.78** gross

Manufacturer: Klemp

Referention number: 3D4-V20-X1-5-S

Information:

Corner joint - 3 axes - 4 sockets - 3D4 V20 X1.5 S. Designed for stable connection of 20x20x1.5 mm aluminum profiles. Made from glass-fiber-reinforced polyamide PA6, which ensures high resistance to abrasion and mechanical damage. The design includes 3 axes and 4 sockets, allowing for versatile applications. The wall thickness of 2 mm enhances the rigidity and durability of the entire construction. Weighing 0.031 kg, it facilitates easy installation. Compatible with standard plastic connectors. Gray color for aesthetic compatibility with the structure.

Product dimensions - B-20 mm; L-20 mm; L1-31,5 mm; B1-16,8 mm; H-16,8 mm

The size of the discount

Quantity	Discount	Spare
10	2%	above €0.36
20	5%	above €1.78
100	15%	above €26.70
500	20%	above €178.00
1000	30%	above €534.00

Product features

Material	Polyamide PA6 - glass fiber reinforced
Colour	Grey Matt
Type	Corner elbow
Mounting method	By plug, using a rubber hammer
Matching profile	20x20x1,5 mm
Number of axes	3
Number of slots	4
Core	Standard plastic connectors